S/MSA-E COMBI

silc
THE EVOLUTION IN FINISHING

Self-contained combined multi-function machine composed of:

- **Form finisher with built-in electric boiler complete with special frame for finishing shirts**
- **Collar and cuff press for bench with manual functioning. Electric heated polished top buck with electronic thermo regulator.**
- **Ironing table with board adjustable in height and on three positions. Table top with universal shape, electric heated, vacuum and with blow. Complete with steam iron, swing arm with sleeve form, iron support group with pulley and lighting device.**

Completely self-contained unit which does not require compressed air; it must be connected only to power and water supplies. The machine can adapt to every working place thanks to the small dimensions and the possibility of adjust the position of the table top. The steam generator is conform to European "PED" standards (with PASCAL certification) and has capacity of 14L and element of 7,5kW (on request 9 kW).
Electronic control of the finishing cycles by means of a microprocessor with independent programs for each unit. Possibility of use all the three machines together or only one of them.

SIL FIM SRL
Via Campania 19
60035 Jesi (AN) - Italy

Tel: (+39) 0731 21801
Fax: (+39) 0731 200355
E-mail: informa@silcspa.com - www.silcspa.it

S/MSA-E COMBI

silc
THE EVOLUTION IN FINISHING

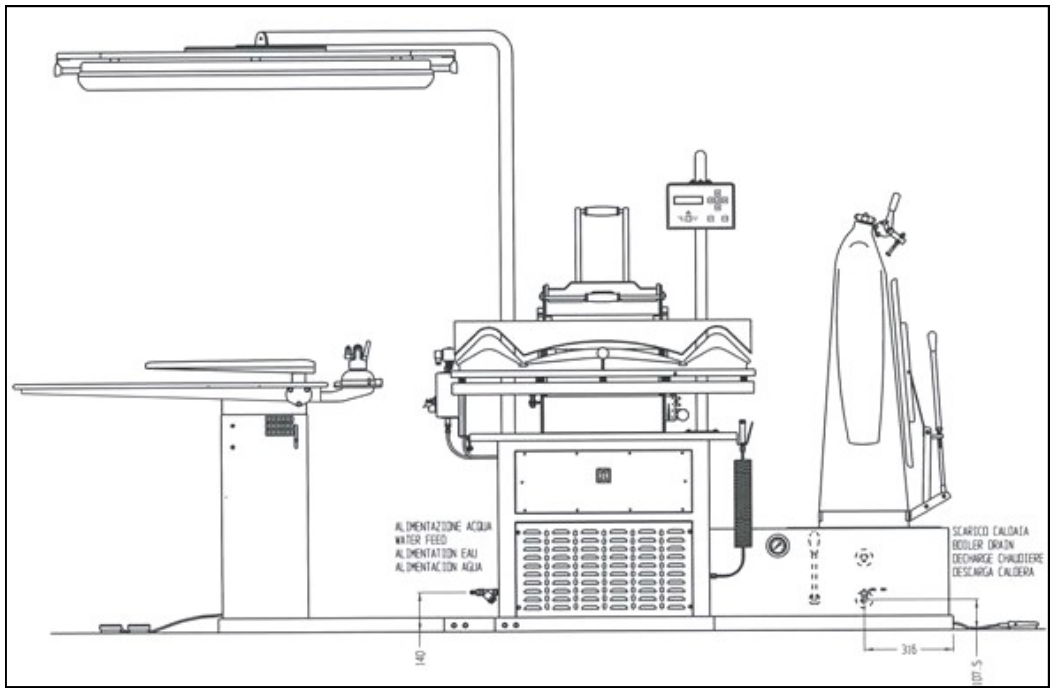

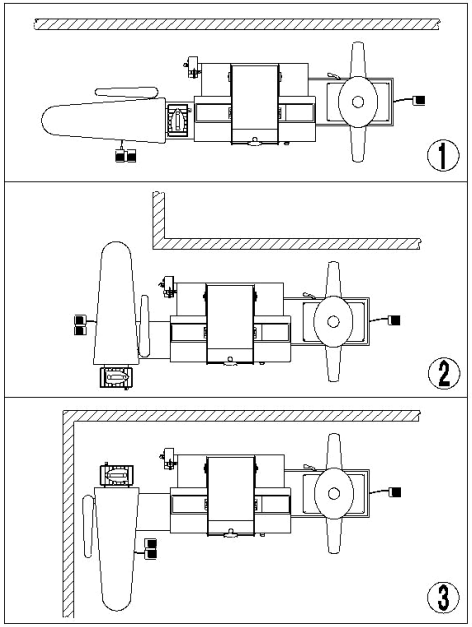

Dimensions and ironing table configurations

TECHNICAL DATA

Electrical connection	400V - 3F - 50/60Hz	**Boiler element**	7,5 kW	**Table top dimensions**	cm 112x42x26
Total power	11 kW	**Steam production**	12 kg/h	**Table top height**	cm 85 ÷92,5
Dimensions	cm 315x85x215(h)	**Steam pressure**	5 bar	**Iron element**	800 W
Net weight	330 kg	**Ventilated air capacity**	50 Lt/min	**Press buck temperature**	0 ÷ 200 °C
Boiler capacity	14 Lt	**Water consumption**	12 Lt/h	**Press buck pressure**	0 ÷ 300 g/cm^2

SIL FIM SRL
Via Campania 19
60035 Jesi (AN) - Italy

Tel: (+39) 0731 21801
Fax: (+39) 0731 200355
E-mail: informa@silcspa.com - www.silcspa.it